Architectural Door Accessories

ASSA ABLOY
Opening Solutions

Experience a safer
and more open world

Rockwood LT-B1 Lite Kit

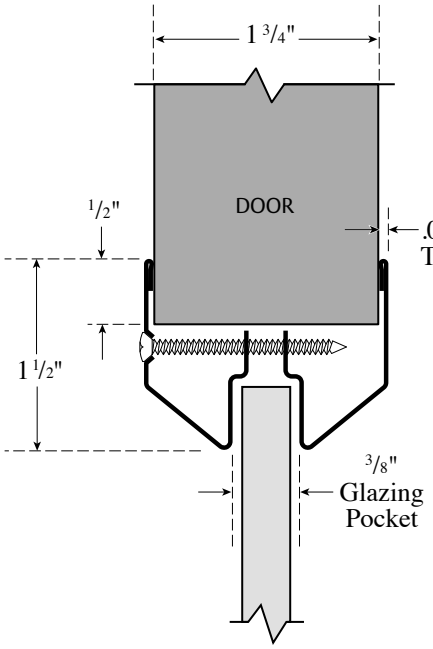

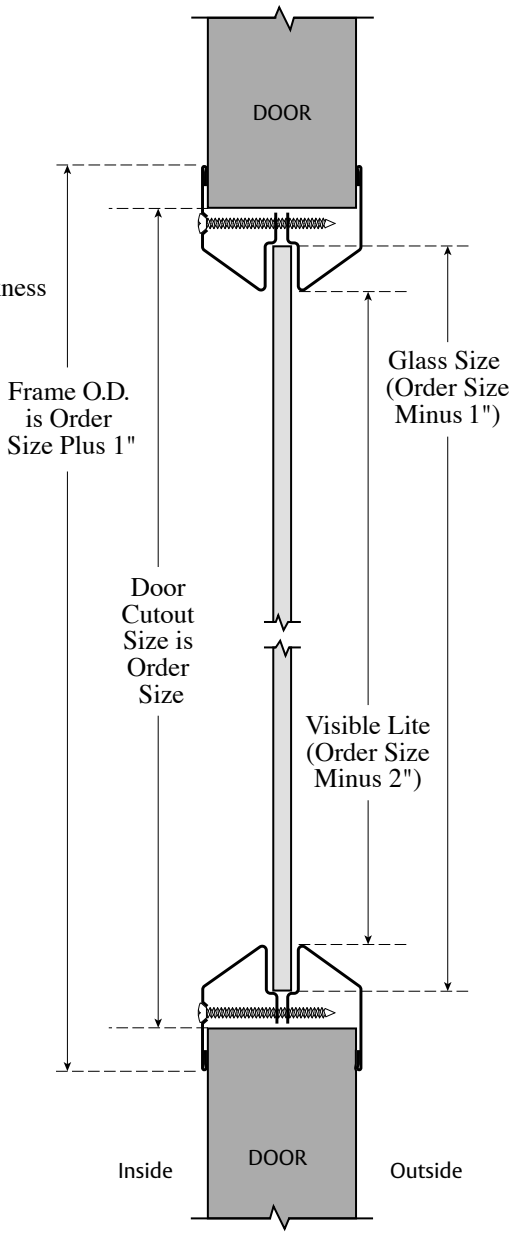

Available Finishes:

- Beige (Beige Powder Coat)
- Dark Bronze (Dark Bronze Duranodic Powder Coat)
- Gray (Gray Primer Powder Coat)
- 10BE
- BSP (Black Suede Powder Coat)
- WSP (White Suede Powder Coat)
- Stock PC

Dimensions:
- Minimum Width: 4"
  Maximum Width: 38"
- Minimum Height: 5"
  Maximum Height: 82"

For 1 3/4" Wood/Metal Doors

Glazing Pocket: 3/8"
For 1/4" Glass

Standard Features:

MATERIAL:
20 gauge steel

FASTENERS:
- #8 x 1 3/4" OH SMS

FIRE RATING:
- Classified in accordance with UBC code standard 7-2 for positive pressure

OPTIONS:
- Security screws
- Custom powder coats

c UL us LISTED

300 Main Street
Rockwood, Pennsylvania 15557
P: 800.458.2424 | F: 800.922.9212
www.assaabloydooraccessories.us | orders.rockwood@assaabloy.com

Copyright © 2020, ASSA ABLOY Accessories and Door Controls Group, Inc. All rights reserved. Reproduction in whole or in part without the express written permission of ASSA ABLOY Accessories and Door Controls Group, Inc. is prohibited.