911334-00

2227

VON DUPRIN®

Surface Vertical Rod Device

Installation Instructions

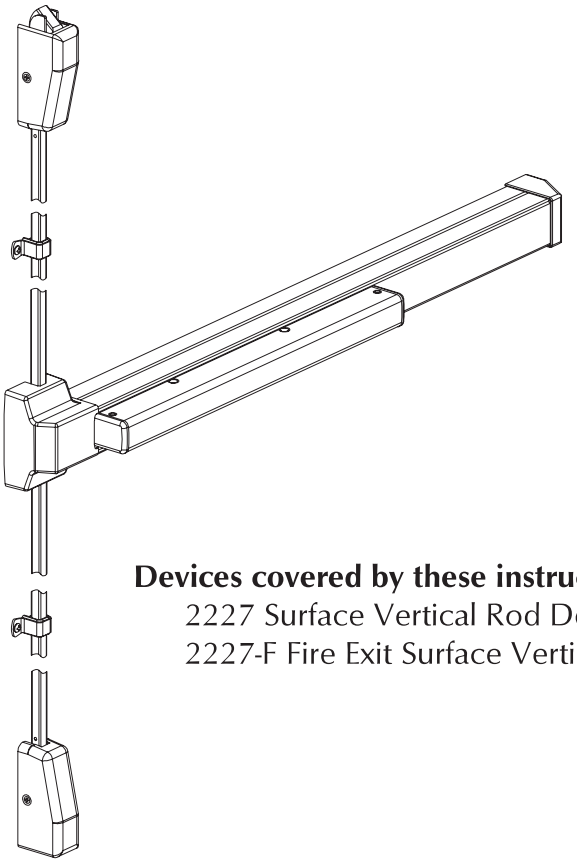

Devices covered by these instructions:

2227 Surface Vertical Rod Device
2227-F Fire Exit Surface Vertical Rod Device

BEFORE STARTING INSTALLATION

1. Check hardware schedule for strikes, fasteners, and other special requirements.
2. Check carton label for trim, strikes, options, and order number.
3. Read all instructions, including instructions provided with any options used: trim, alarm kit, glass bead kit, latch guard kit, and rod guard kit.
4. Gather special tools required:
   - #10-24 tap
   - #25 drill bit
   - 1/8″ dia. drill bit
   - 1/4″ dia. drill bit
   - 5/16″ dia. drill bit
   - 13/32″ dia. drill bit
   - Hacksaw
   - 7/8″ dia. hole saw

Customer Service
1-877-671-7011 www.allegion.com/us

ALLEGION™

© Allegion 2014
Printed in U.S.A.
911334-00 Rev. 01/14-b

GENERAL INFORMATION

Review pages 2 and 3 so you can identify the hardware and understand the terminology used in the instructions.

See page 16 for the "Metric Conversion Table" if needed.

These exit devices can be installed on the door widths listed below:

Device Size	Code/Standard Requirement	Door Size
Standard 3′ (32″)	NFPA101	24-3/4″ to 36″
Standard 4′ (44″)	NFPA101	30-3/4″ to 48″

NOTE

Dogging panic device during high traffic periods will increase life of device. To dog, depress pushbar and turn hex key one-quarter turn clockwise.

MAINTENANCE

Von Duprin 2227 exit devices are designed and built to be maintenance free; however, such factors as installation, severity of use, environmental conditions, and changes in the condition of the door opening may require that maintenance and/or device adjustment be performed. The following guidelines are recommended to the building owner to insure proper device operation:

1. Check device operation for smooth operation periodically.
2. Check strikes (keeper) and latches to insure they are secure.
3. Check latches and other moving parts for binding or sluggish operation due to dirt or chemical buildup. Clean parts with soap and water and then lubricate with graphite-based or silicone lubricants. Do not use petroleum-based lubricants.

OUTSIDE TRIM

No outside trim supplied for EO (exit only) application

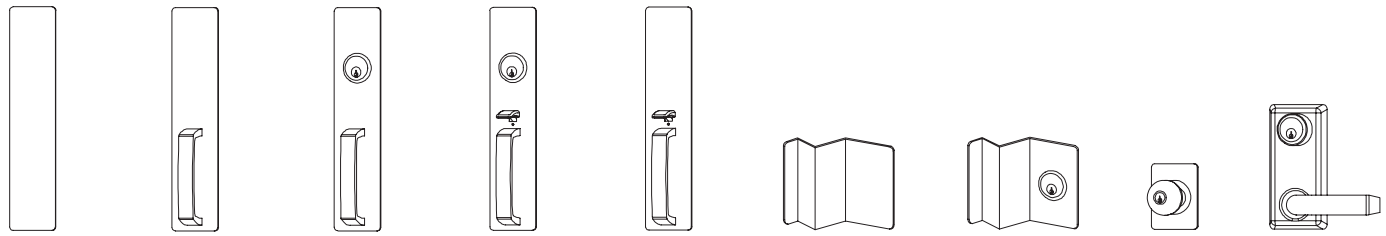

Escutcheon (optional for EO application) | **DT** (pull when dogged) | **NL** (key retracts latch bolt) | **TP** (key locks thumbpiece) | **TP-BE** (thumbpiece; unlocked) | **DT** (pull when dogged) | **NL** (key retracts latch bolt) | **K** (key locks knob) | **L** (key locks lever)

2227/2227-F PARTS LIST

Item	Quantity	Description
In end cap package:		
1	4	#8-18 x 1/2″ undercut flat head machine screw
In 299/299F strike package:		
2	3	#10-24 x 3/4″ flat head machine screw (metal frame)
2	3	#10-24 x 1-1/2″ flat head wood screw (wood frame)
In 260U strike package:		
3	3	#10-12 x 10-24 x 1-1/4″ oval head combination screw

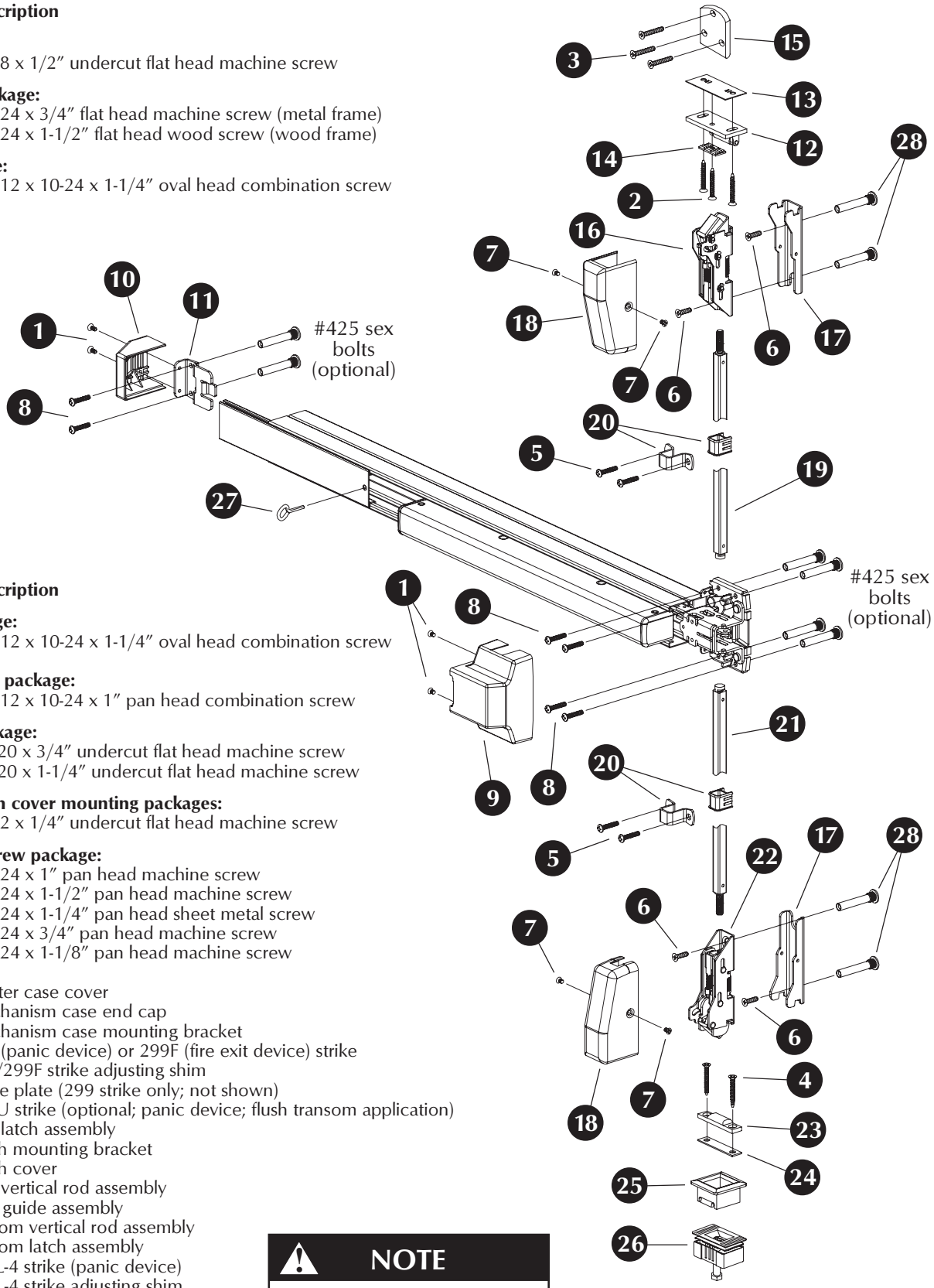

Item	Quantity	Description
In 248L-4 strike package:		
4	2	#10-12 x 10-24 x 1-1/4″ oval head combination screw
In rod guide mounting package:		
5	4	#10-12 x 10-24 x 1″ pan head combination screw
In latch mounting package:		
6	4	1/4-20 x 3/4″ undercut flat head machine screw
6	4	1/4-20 x 1-1/4″ undercut flat head machine screw
In each of two (2) latch cover mounting packages:		
7	2	#8-32 x 1/4″ undercut flat head machine screw
In device mounting screw package:		
8	4	#10-24 x 1″ pan head machine screw
8	4	#10-24 x 1-1/2″ pan head machine screw
8	6	#10-24 x 1-1/4″ pan head sheet metal screw
8	2	#10-24 x 3/4″ pan head machine screw
8	2	#10-24 x 1-1/8″ pan head machine screw
9	1	Center case cover
10	1	Mechanism case end cap
11	1	Mechanism case mounting bracket
12	1	299 (panic device) or 299F (fire exit device) strike
13	1	299/299F strike adjusting shim
14	1	Strike plate (299 strike only; not shown)
15	1	260U strike (optional; panic device; flush transom application)
16	1	Top latch assembly
17	2	Latch mounting bracket
18	2	Latch cover
19	1	Top vertical rod assembly
20	2	Rod guide assembly
21	1	Bottom vertical rod assembly
22	1	Bottom latch assembly
23	1	248L-4 strike (panic device)
24	3	248L-4 strike adjusting shim
25	1	304L strike
26	1	385A strike (optional)
27	1	Dogging key (panic device)
28	4	#325 sex bolts

NOTE

#325 sex bolts must be used to install latches on all types of doors.

INSTALLATION

1 Cut device if necessary.

1.1. Device length **A** must be at least 3″ shorter than opening **B** (Figure 1-1).

1.2. If necessary, cut device so **A** is at least 3″ shorter than **B** (Figure 1-2).

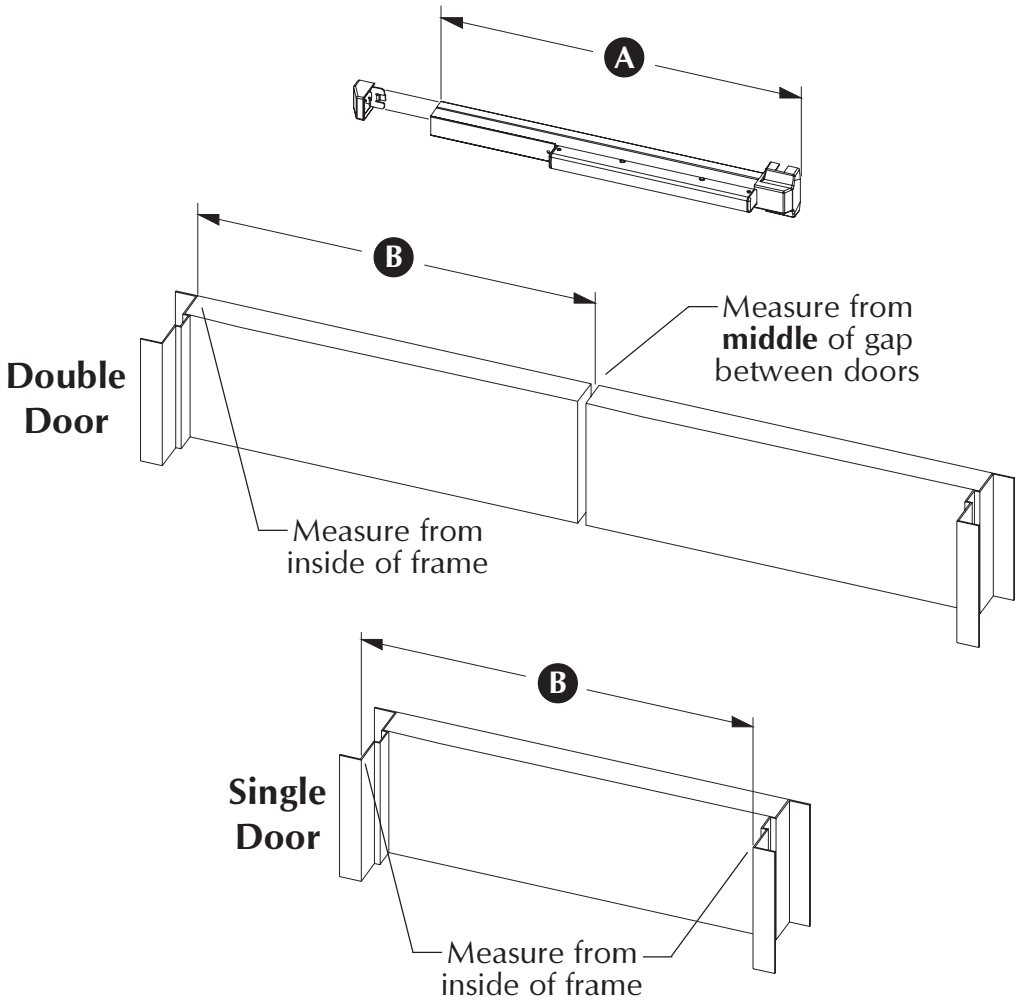

Figure 1-1

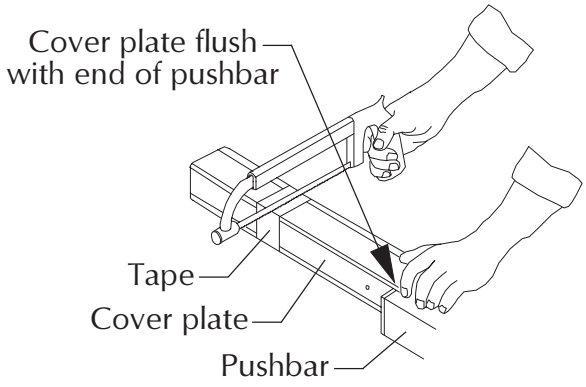

NOTE

If using ALK exit alarm option, install ALK cover plate before cutting device.

Figure 1-2

2 Prepare door.

2.1. Mark center line locations ℄ as shown (Figure 2-1).

2.2. Tape templates to door aligned with center lines ℄.

2.3. Mark and prepare mounting holes per templates.

2.4. Prepare door for outside trim (see trim instructions).

NOTE

For wood fire doors with metal edge, increase backset so device center case clears metal edge.

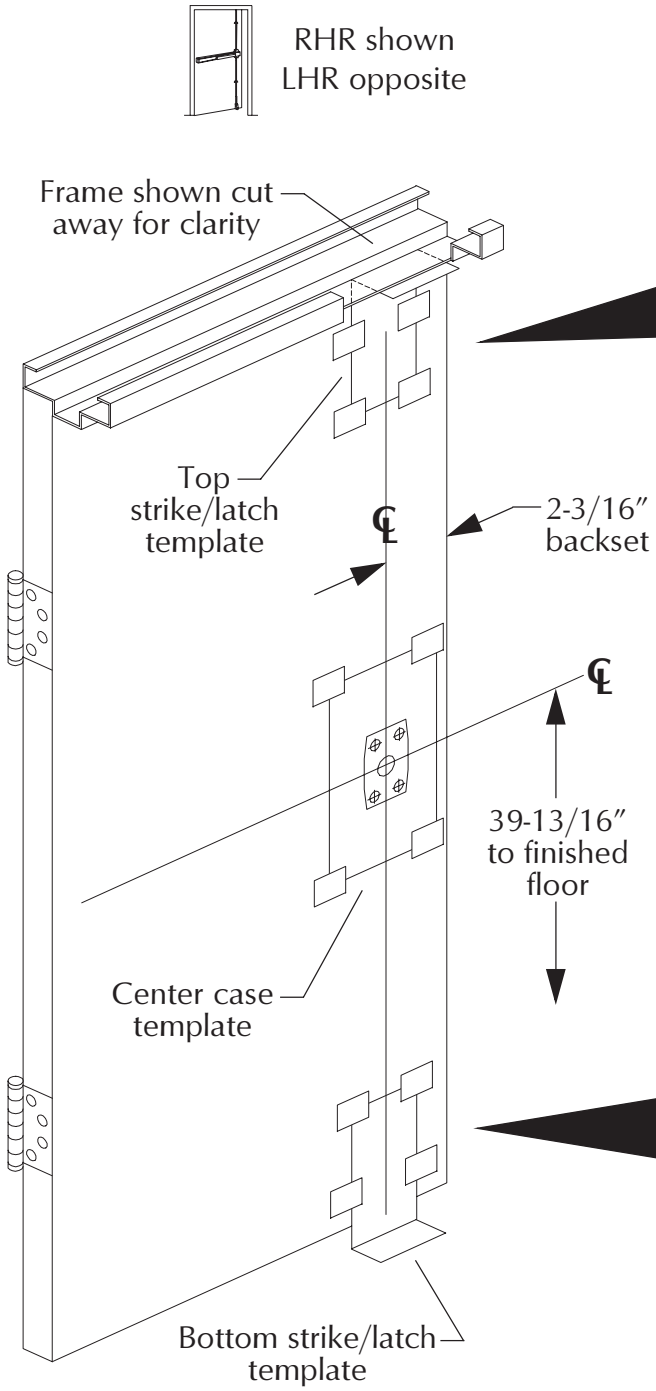

Figure 2-1

Top Strike/Latch Template Positions

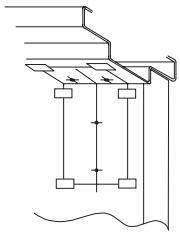

299, 299F, or 499F strike (Template #2)
Place template fold against bottom of stop

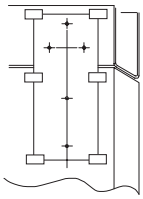

260U strike for flush transom (Template #5)
Place mark on template even with top of door

Bottom Strike/Latch Template Positions

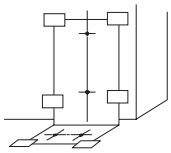

304L strike (Template #3) or 248L-4 strike without threshold (Template #6)
Place template fold against finished floor

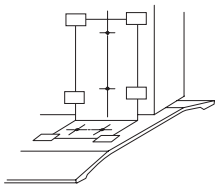

248L-4 strike with threshold (Template #6)
Place template fold against top of threshold

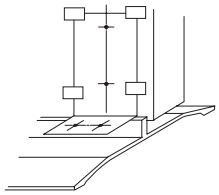

Latch track threshold (Template #4)
Place template fold against top of latch track

3 Install device.

3.1. If using cylinder in trim, install tailpiece guide (packaged with trim) in device.

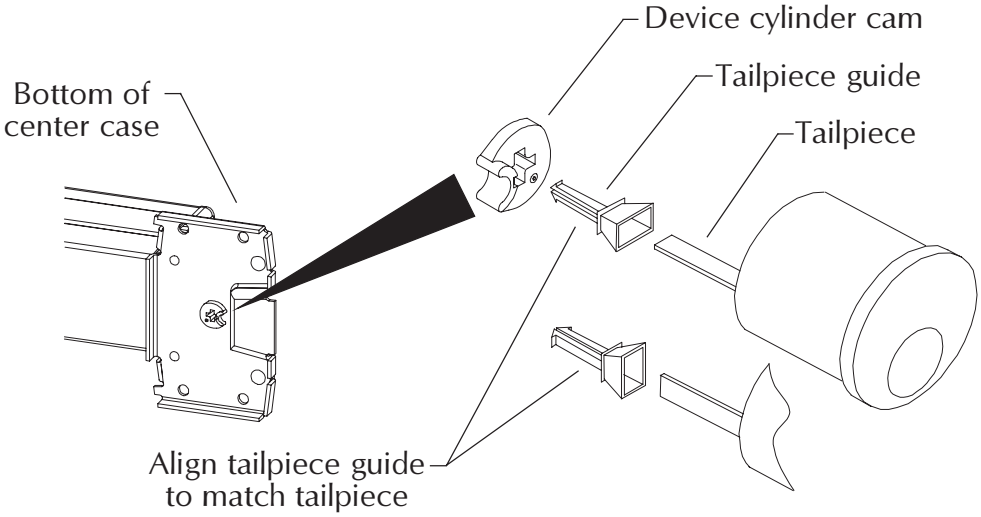

3.2. Install device to door at center case.

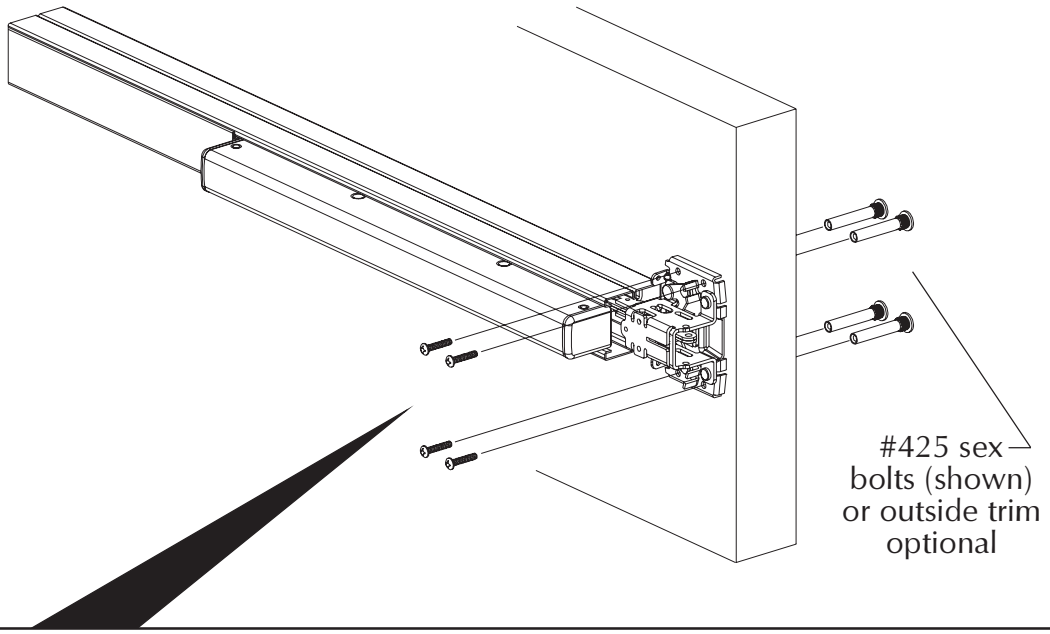

Use screws from device mounting screw package

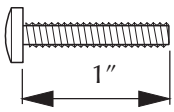

#10-24 pan head machine for metal door surface mount, sex bolts on 1-3/4″ door, or outside trim on 1-3/4″ door

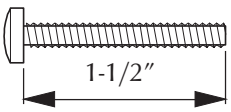

#10-24 pan head machine for sex bolts on 2-1/4″ door or outside trim on 2-1/4″ door

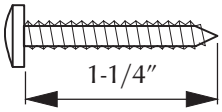

#10-24 pan head sheet metal for wood door surface mount

3 Install device (continued).

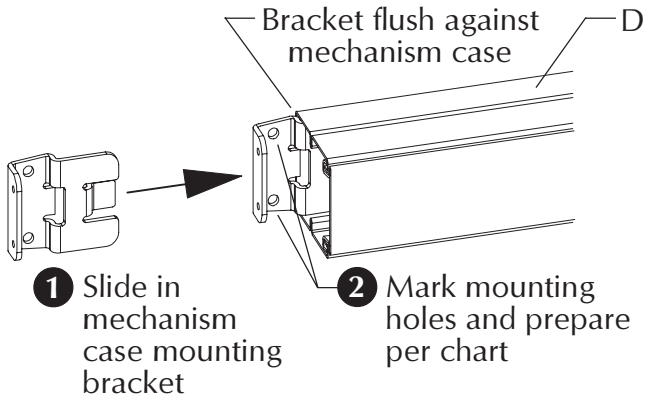

Surface Mount
Metal Door: #25 drill and #10-24 tap inside
Wood Door: 1/8″ pilot drill, 1″ deep, inside

Sex Bolts
Metal Door: 1/4″ drill inside, 13/32″ drill outside
Wood Door: 13/32″ drill thru

Use screws from end cap package

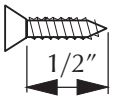

#8-18 undercut flat head machine

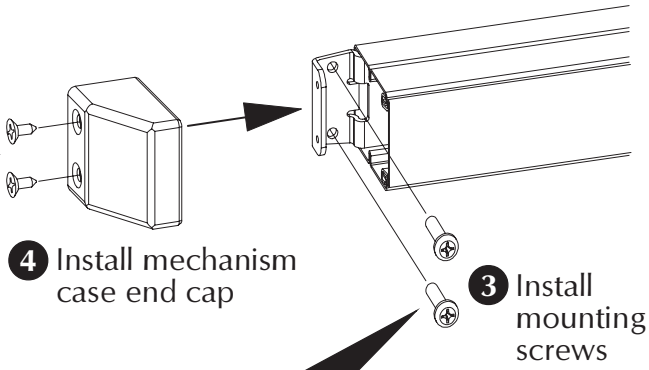

Use screws from device mounting screw package

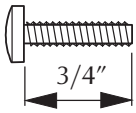

#10-24 pan head machine for metal door surface mount or sex bolts on 1-3/4″ door

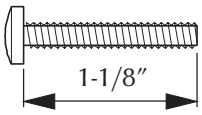

#10-24 pan head machine for sex bolts on 2-1/4″ door

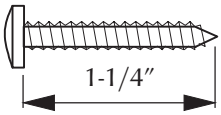

#10-24 pan head sheet metal for wood door surface mount

4 Install top and bottom latches.

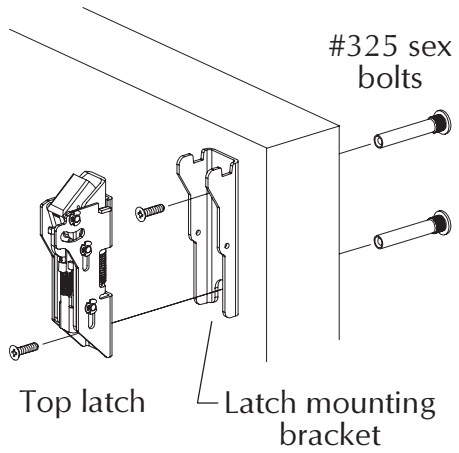

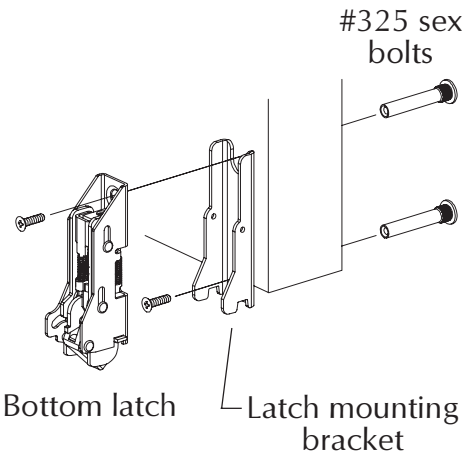

Use screws from latch mounting package

1/4-20 undercut flat head machine

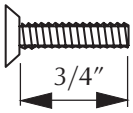

1-3/4″ door

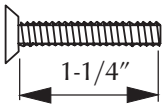

2-1/4″ door

5 Install top strike.

299 and 299F Strikes

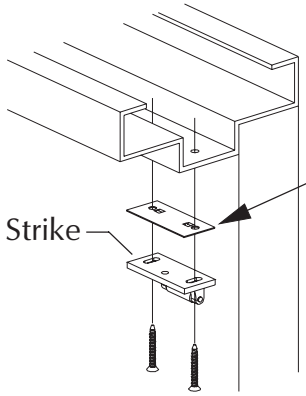

Use shim if necessary for 3/16″ spacing

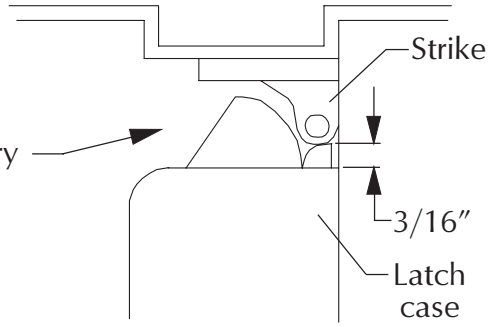

Use screws from 299/299F strike package

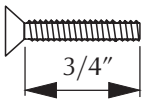

#10-24 flat head machine for metal frame

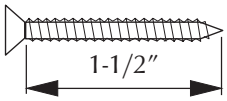

#10 flat head wood for wood frame

After strike is adjusted, prepare center mounting hole same as other strike mounting holes and install center screw (strike plate used for 299 strike only)

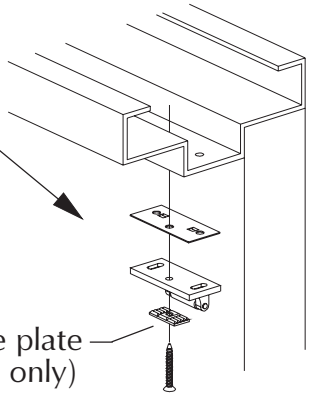

260U Strike

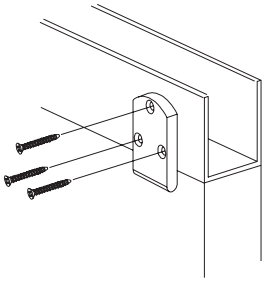

Use screws from 260U strike package

#10-12 x 10-24 oval head combination

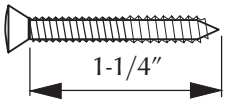

6 Install bottom strike.

248L-4 Strike

Add shim(s) so strike engages extended latch bolt but clears latch case

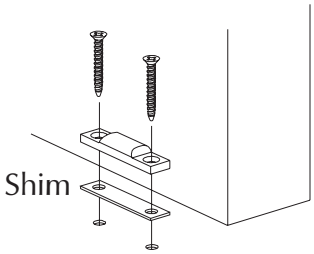

Use screws from 248L-4 strike package

#10-12 x 10-24 oval head combination

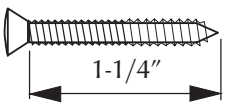

304L Strike

Grout strike into floor

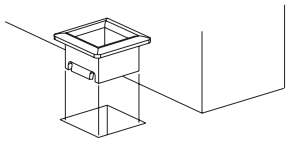

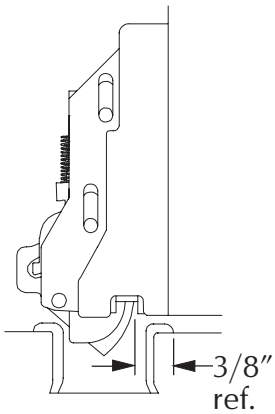

7 If door height is less than 84″, cut top rod. (Uncut top rod is about 38-3/4″ overall.)

7.1. Find amount to cut off (Figure 7-1).

7.2. Cut top rod (Figure 7-2).

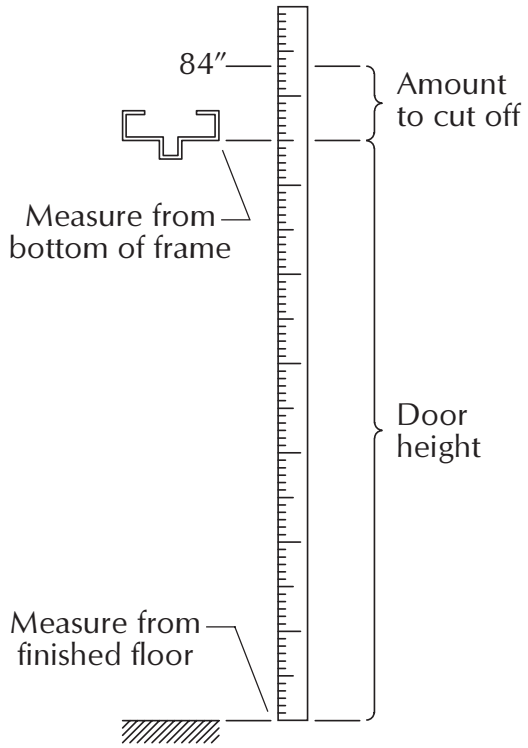

Figure 7-1

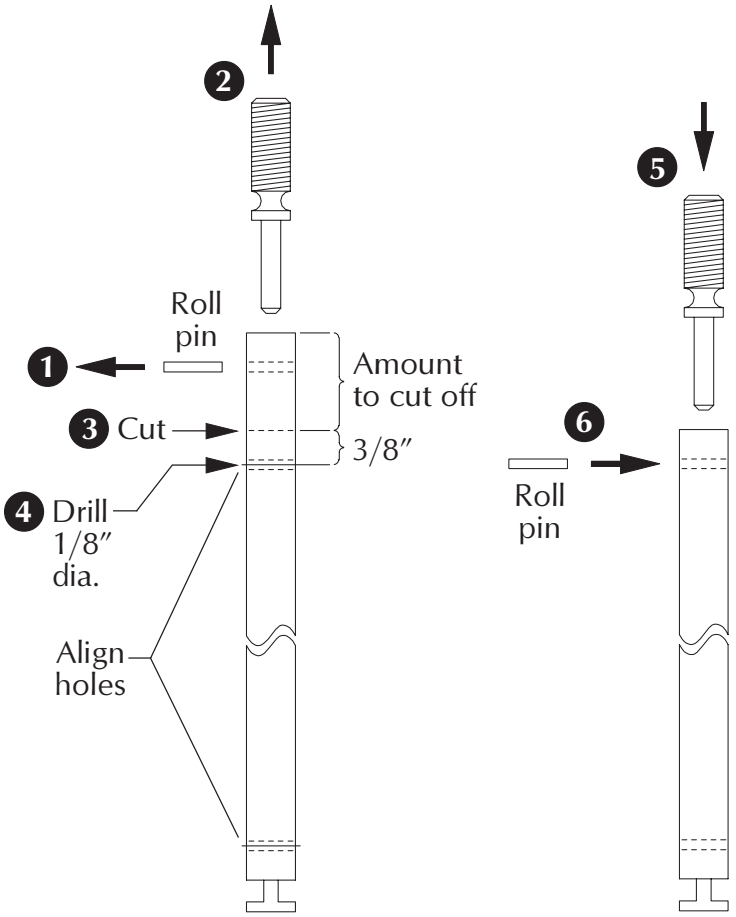

Figure 7-2

8 If using threshold, cut bottom rod. (Uncut bottom rod is about 34-7/8″ overall.)

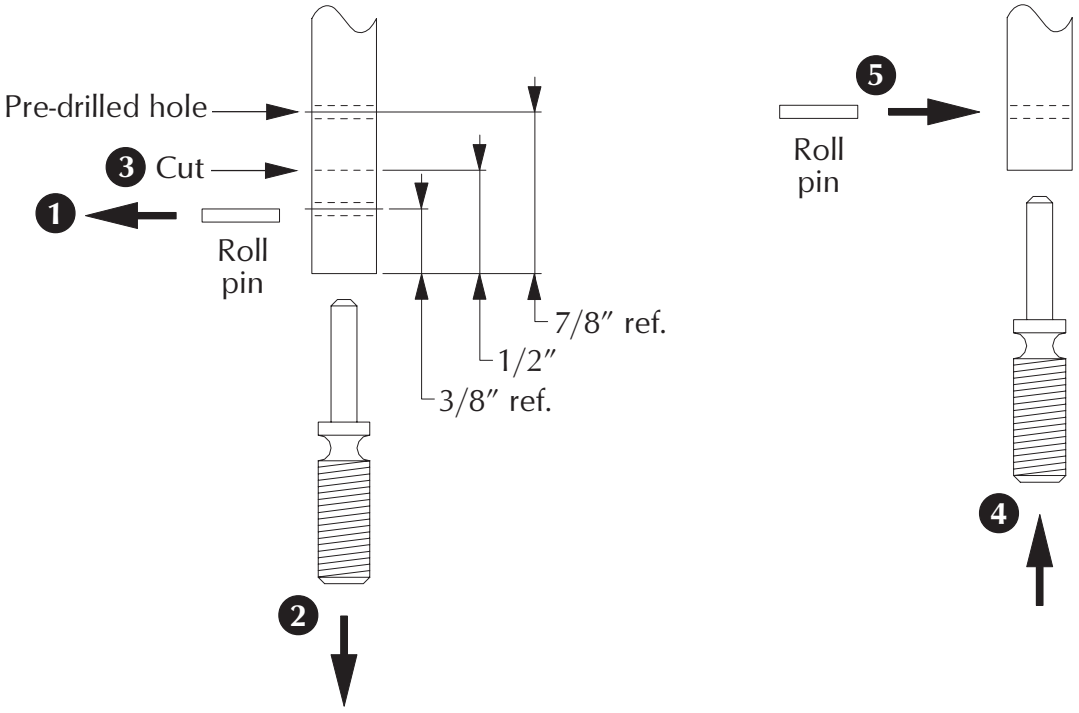

9 If door height is more than 84″, prepare rod extension.

9.1. Find amount to cut off rod extension (Figure 9-1).

9.2. Cut rod extension (Figure 9-2).

9.3. Drill hole in rod extension (Figure 9-3).

9.4. Assemble rod extension rod (Figure 9-4).

9.5. Connect rod extension to top rod (Figure 9-5).

IMPORTANT

For door heights less than 88″, cut top rod instead of rod extension.

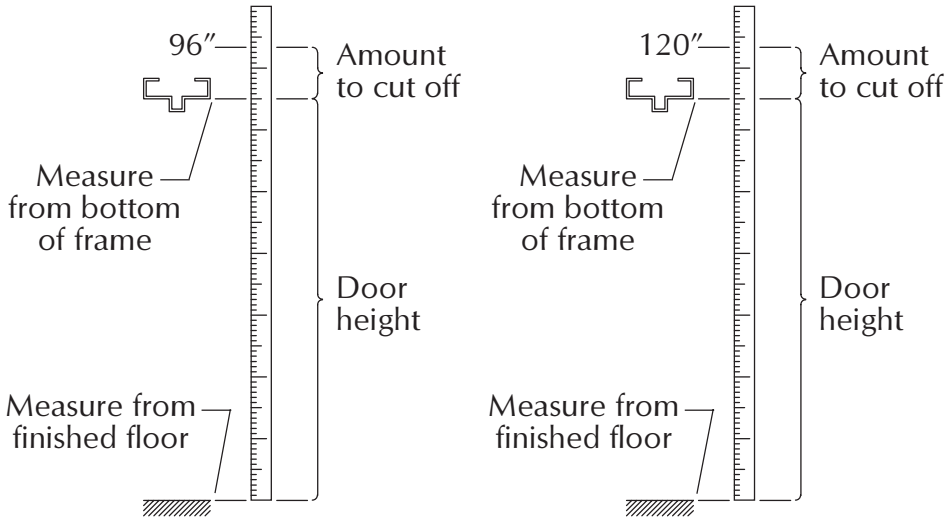

Door height between 84″ and 96″.

Door height between 96″ and 120″.

Figure 9-1

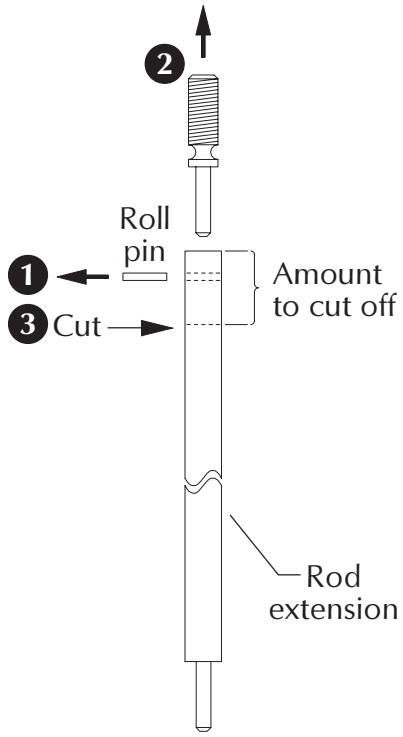

Figure 9-2

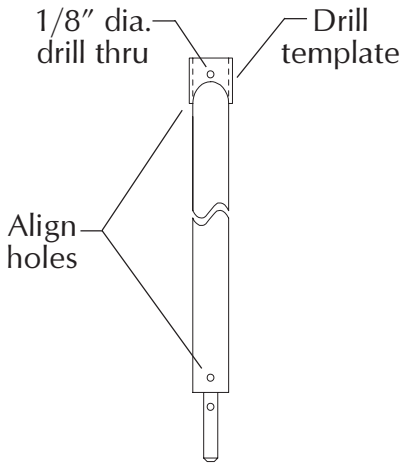

Figure 9-3

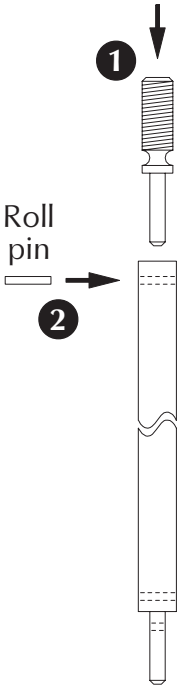

Figure 9-4

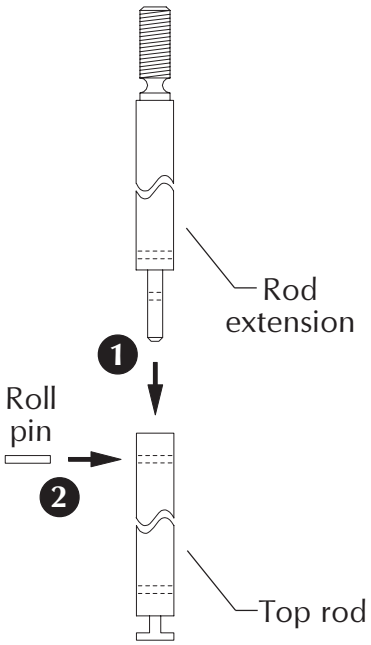

Figure 9-5

10 Install and adjust top rod.

Install

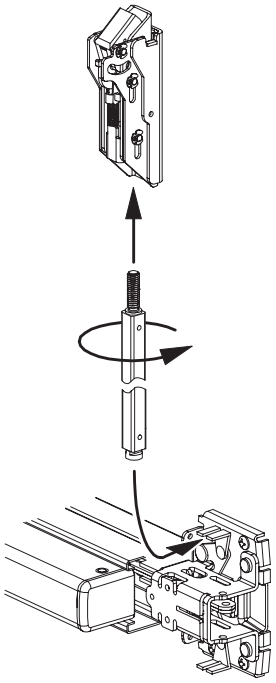

Adjust (screw rod into or out of latch)

With door closed:
Latch bolt fully extended
and deadlatched
(will not push in)

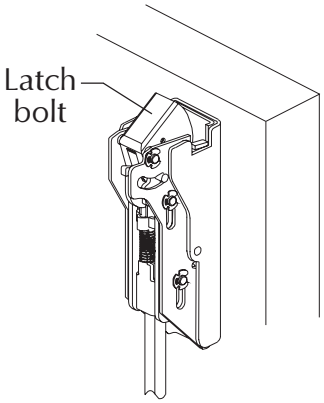

With door open:
Latch bolt flush with
or slighly below latch case
and release trigger extended

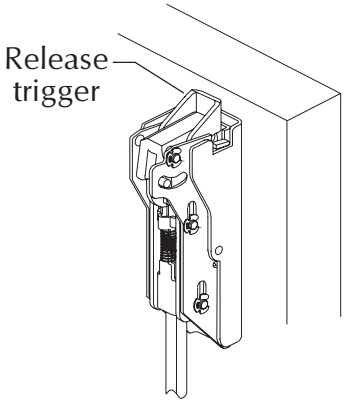

11 Install and adjust bottom rod.

Install (with door open)

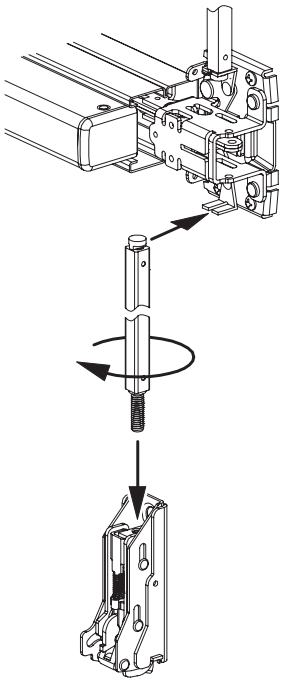

Adjust (screw rod into or out of latch)

With door open:
Latch bolt clears floor
and does not bind on strike

With door closed:
Latch bolt fully extended
and deadlatched
(will not push in)

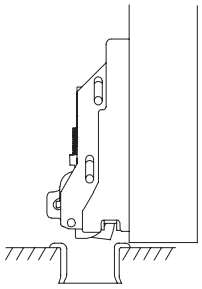

304L strike

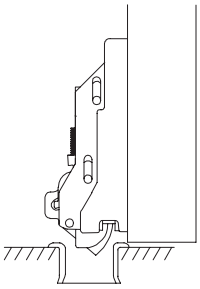

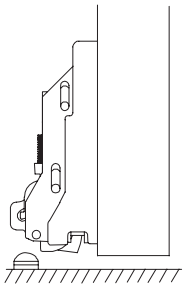

248L-4 strike

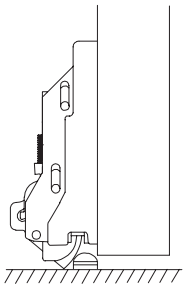

12 Install rod guides, center case cover, and latch covers.

NOTE

If using rod or latch guards, skip this step and see rod or latch guard instructions.

12.1. Disconnect top and bottom rods from center case. Slide rod guide bases ❶ (with legs of bases against door) onto rods. Connect rods to center case.

12.2. Install center case cover ❷.

12.3. Place rod guides ❸ over rod guide bases ❶. Position rod guide/base midway between center case and latch and mark and prepare rod guide mounting holes:

Metal door: #25 drill and #10-24 tap, inside
Wood door: 1/8″ dia. pilot drill x 3/4″ deep, inside

12.4. Install rod guides ❸ over rod guide bases ❶.

12.5. Install latch covers ❹.

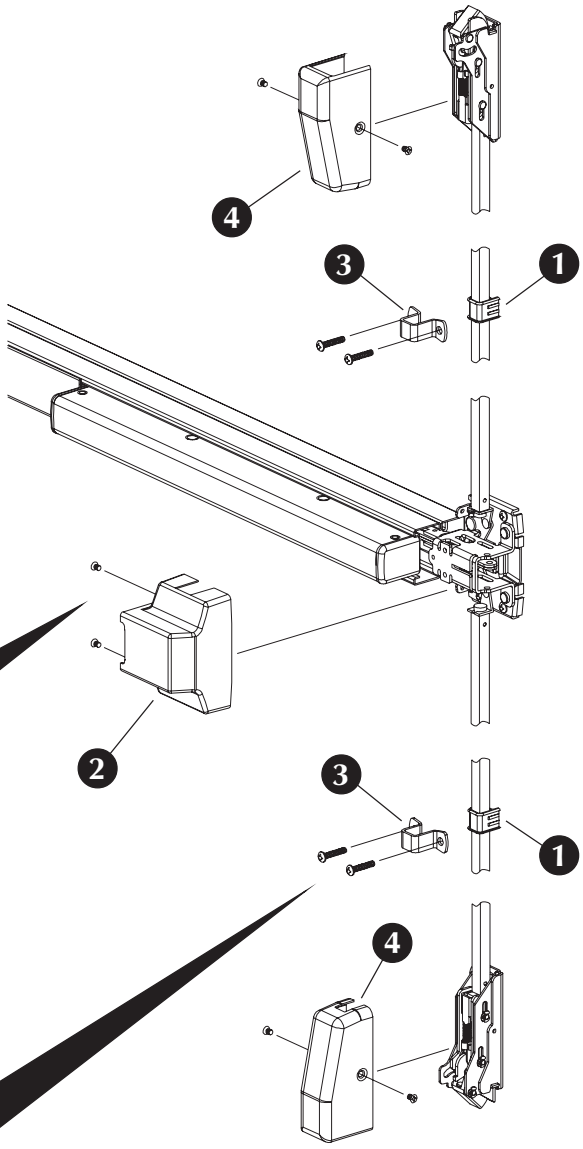

Center case: Use screws from end cap package:

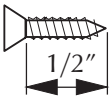

#8-18 undercut
flat head machine

Rod guides: Use screws from rod guide mounting package:

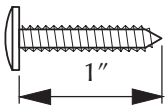

#10-12 x 10-24
combination

Latch covers: Use screws from latch cover mounting package:

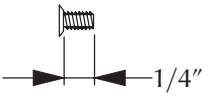

#8-32 undercut
flat head machine

TEMPLATE #1 (LHR)

NOTE

For wood fire doors with metal edge, increase backset so device center case clears metal edge.

2227/2227-F Device

Refer to Step #2 when using this template

Template to scale

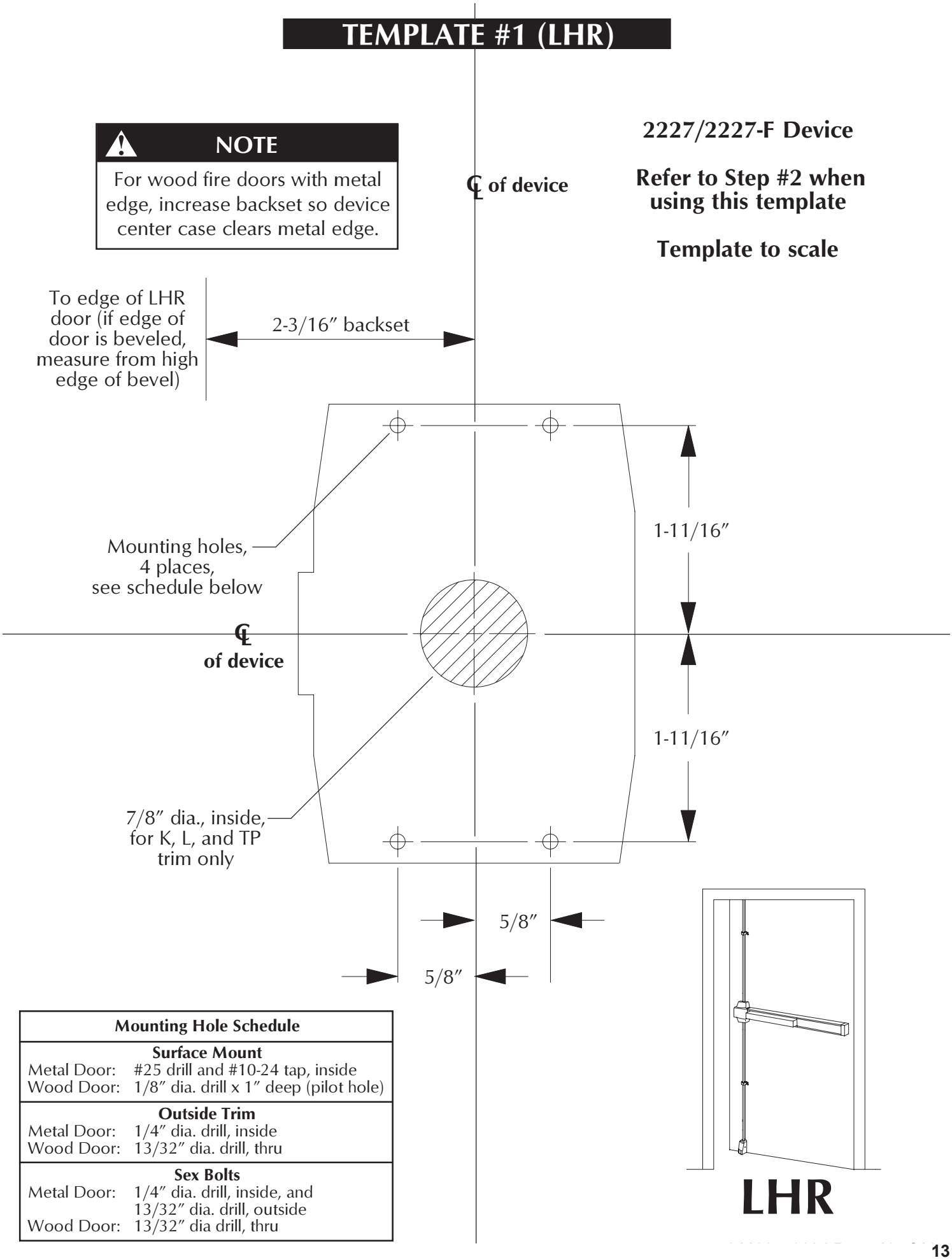

Mounting Hole Schedule	
Surface Mount	
Metal Door:	#25 drill and #10-24 tap, inside
Wood Door:	1/8″ dia. drill x 1″ deep (pilot hole)
Outside Trim	
Metal Door:	1/4″ dia. drill, inside
Wood Door:	13/32″ dia. drill, thru
Sex Bolts	
Metal Door:	1/4″ dia. drill, inside, and 13/32″ dia. drill, outside
Wood Door:	13/32″ dia drill, thru

TEMPLATE #1 (RHR)

2227/2227-F Device

Refer to Step #2 when using this template

Template to scale

NOTE

For wood fire doors with metal edge, increase backset so device center case clears metal edge.

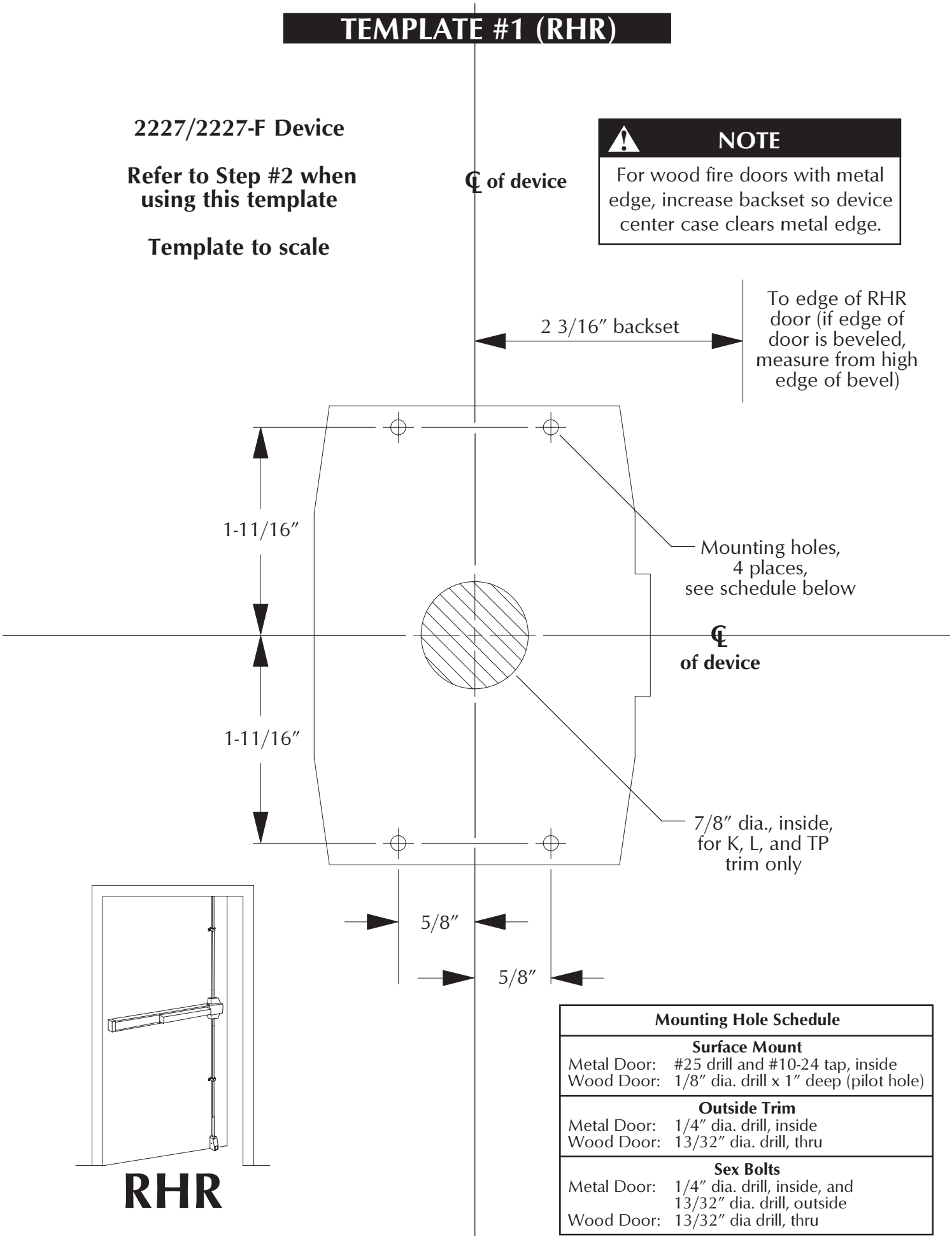

RHR

Mounting Hole Schedule	
Surface Mount	
Metal Door:	#25 drill and #10-24 tap, inside
Wood Door:	1/8″ dia. drill x 1″ deep (pilot hole)
Outside Trim	
Metal Door:	1/4″ dia. drill, inside
Wood Door:	13/32″ dia. drill, thru
Sex Bolts	
Metal Door:	1/4″ dia. drill, inside, and 13/32″ dia. drill, outside
Wood Door:	13/32″ dia drill, thru

TEMPLATE #2
299/299F/499F Strike and Top Latch

299/299F/499F Strike Mounting Holes, 2 Places
Metal Frame: #25 drill and #10-24 tap, inside
Wood Frame: 1/8″ dia. drill x 1″ deep (pilot hole)

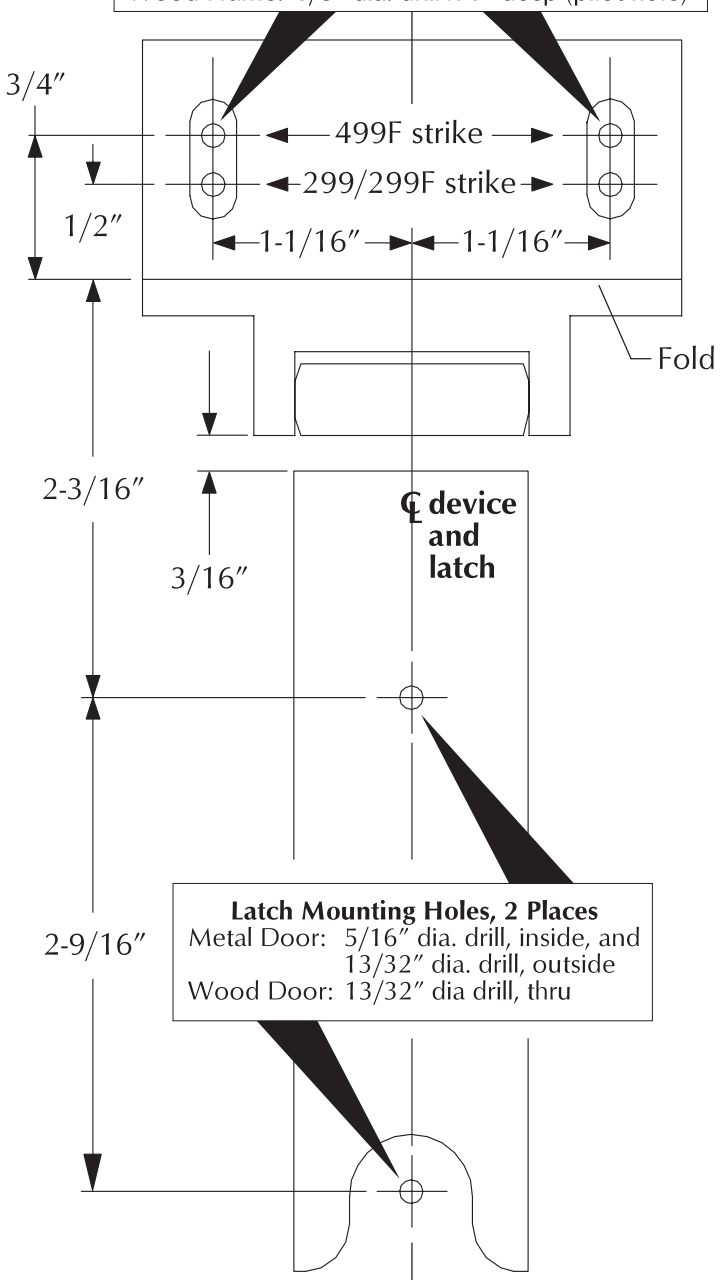

Latch Mounting Holes, 2 Places
Metal Door: 5/16″ dia. drill, inside, and 13/32″ dia. drill, outside
Wood Door: 13/32″ dia drill, thru

TEMPLATE #3
304L Strike and Bottom Latch

Latch Mounting Holes, 2 Places
Metal Door: 5/16″ dia. drill, inside, and 13/32″ dia. drill, outside
Wood Door: 13/32″ dia drill, thru

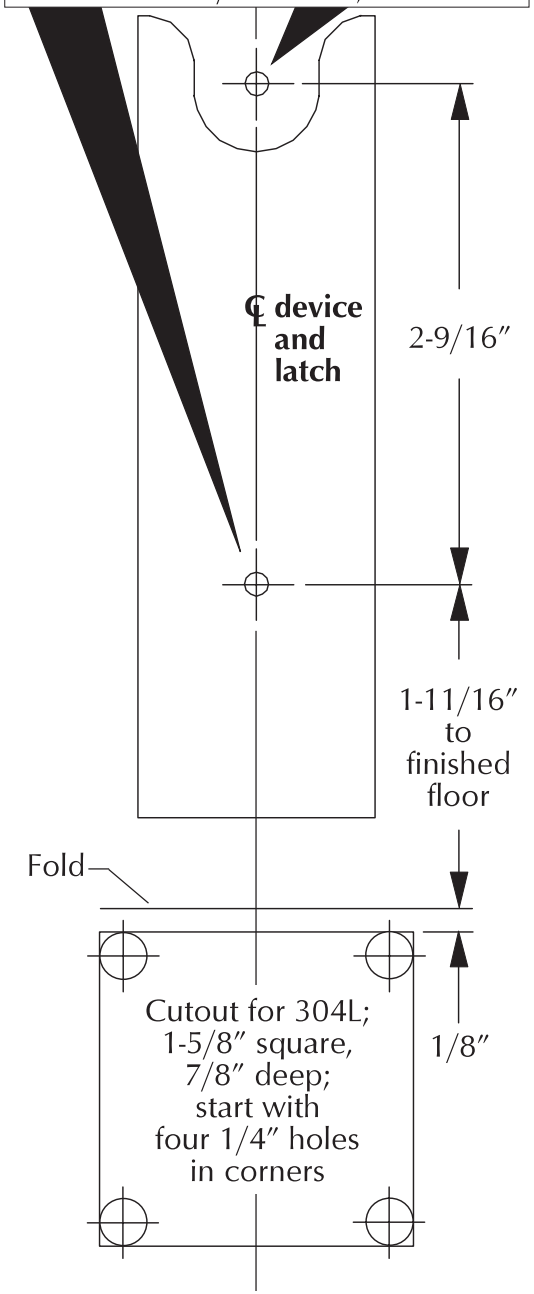

TEMPLATE #4
Threshold Latch Track and Bottom Latch

Latch Mounting Holes, 2 Places
Metal Door: 5/16″ dia. drill, inside, and 13/32″ dia. drill, outside
Wood Door: 13/32″ dia drill, thru

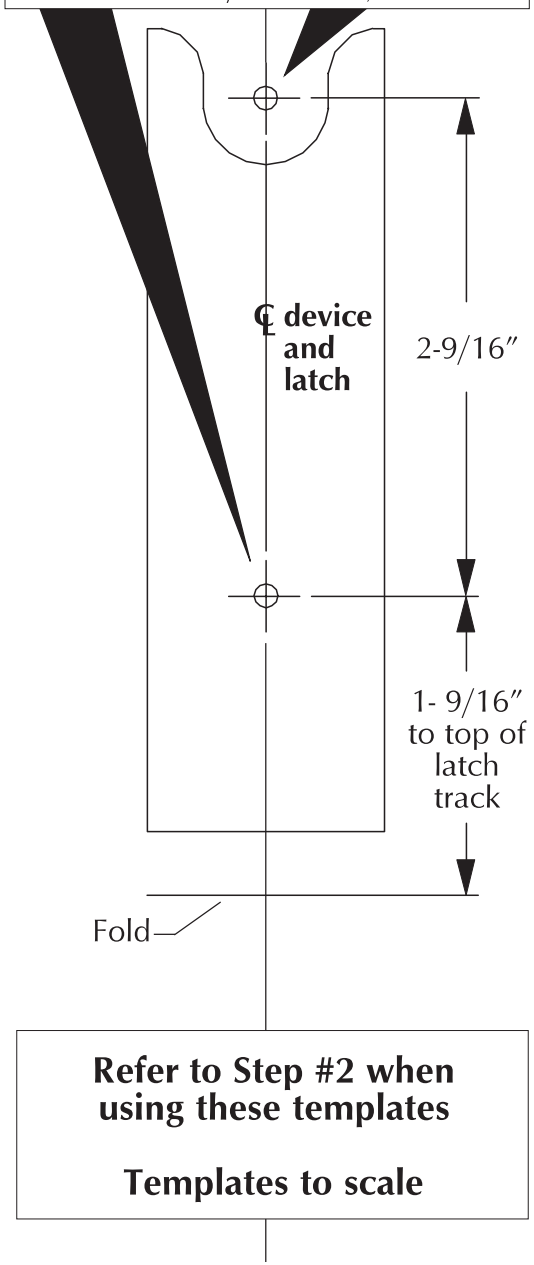

Refer to Step #2 when using these templates

Templates to scale

TEMPLATE #6
248L-4 Strike and Bottom Latch

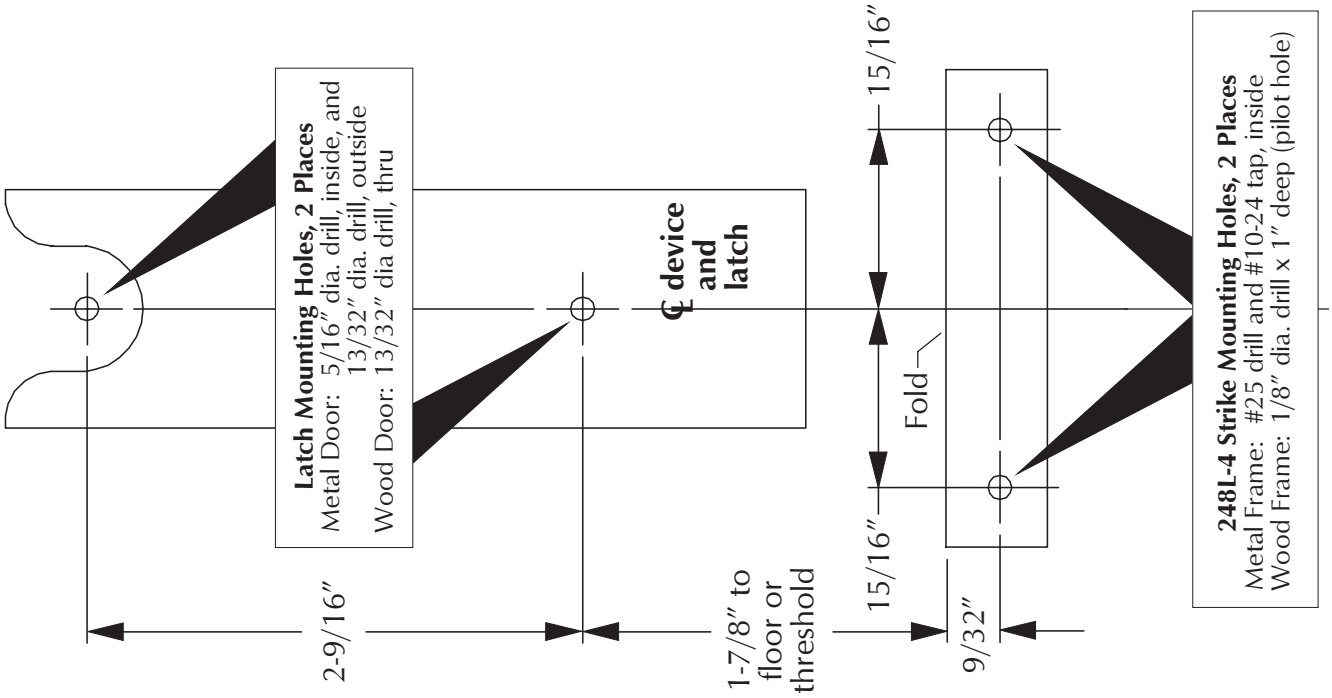

Metric Conversion Table

inches	mm	inches	mm	inches	mm	inches	mm
1/8	3	3/4	19	1-11/16	43	36	914
3/16	5	7/8	22	1-3/4	45	37-1/2	953
1/4	6	15/16	24	2-3/16	56	39-13/16	1011
9/32	7	1	25	2-1/4	57	44	1118
5/16	8	1-1/16	27	2-9/16	65	48	1219
3/8	10	1-1/8	29	3	76	84	2134
13/32	10	1-1/4	32	24-3/4	629	88	2235
1/2	13	1-1/2	38	30-3/4	781	96	2438
9/16	14	1-9/16	40	32	813	120	3048
5/8	16	1-5/8	41	33-1/2	851		

TEMPLATE #5
260U Strike and Top Latch

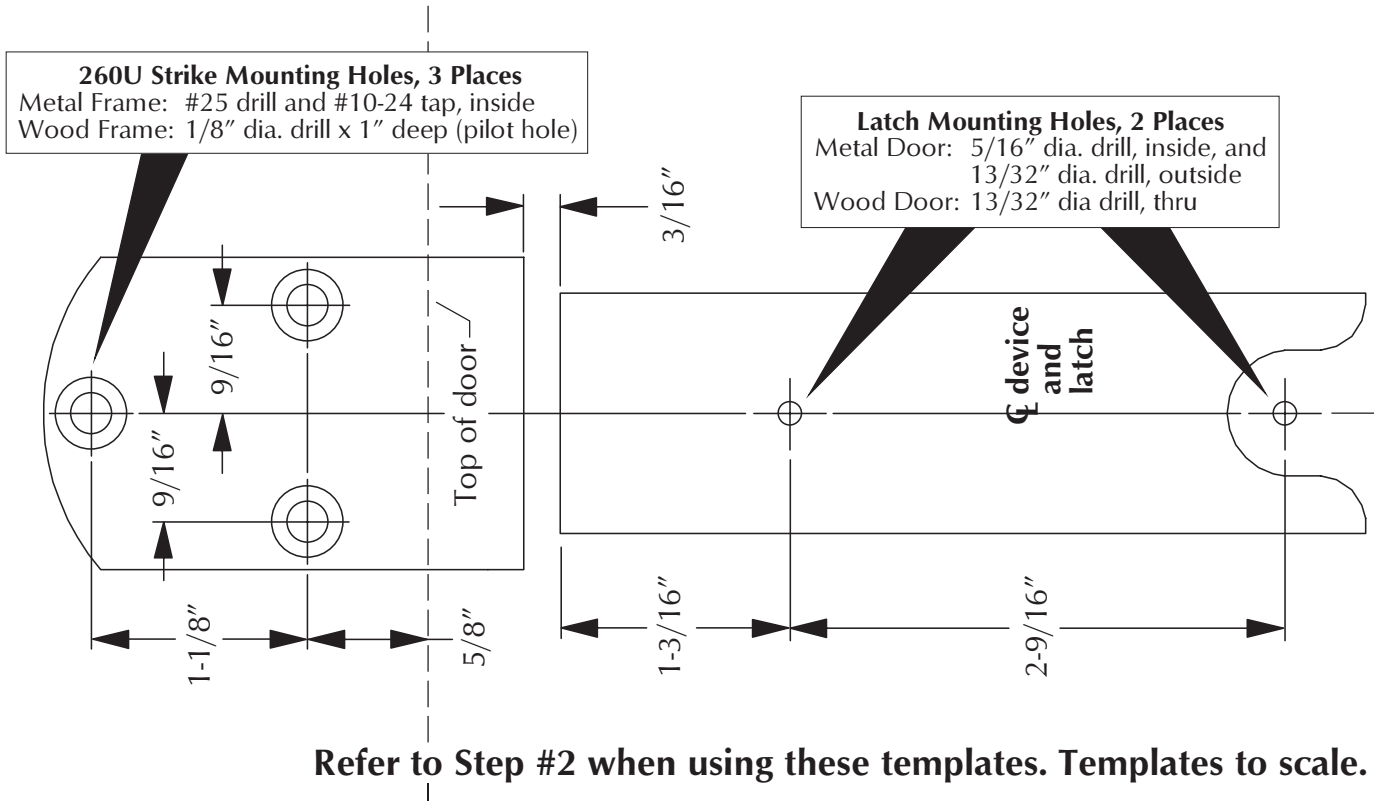

Refer to Step #2 when using these templates. Templates to scale.